30 INCH 3D CUBE TEMPLATE

Top

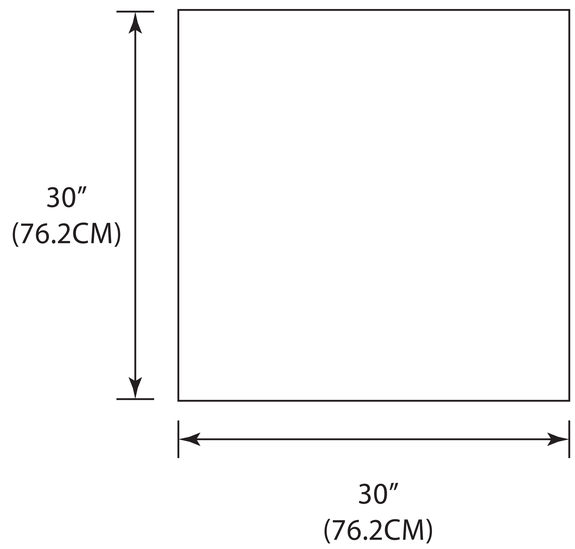

Left

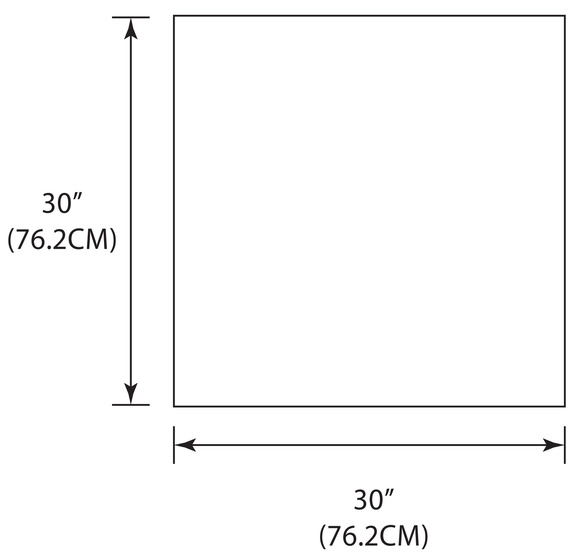

Front

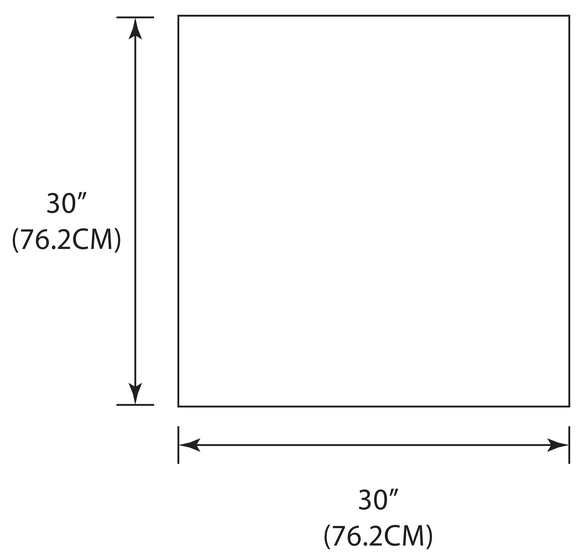

Right

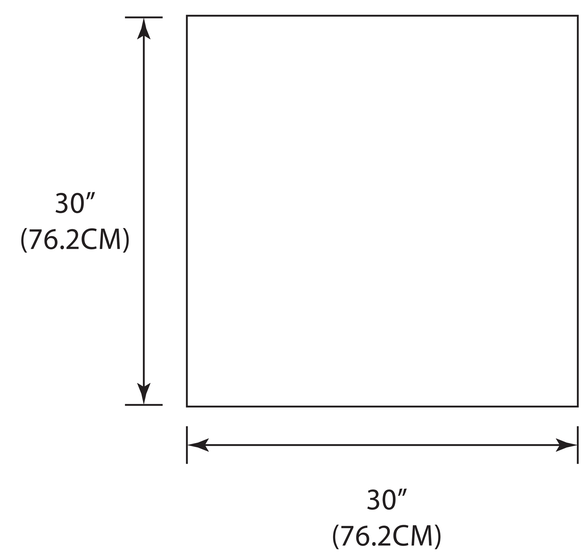

Back

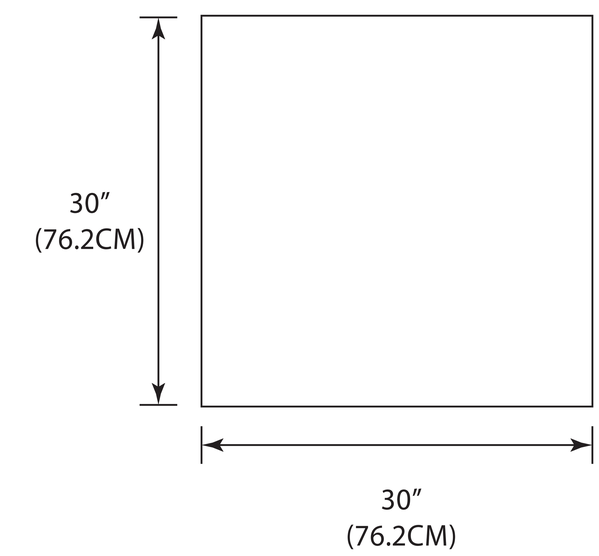

Bottom

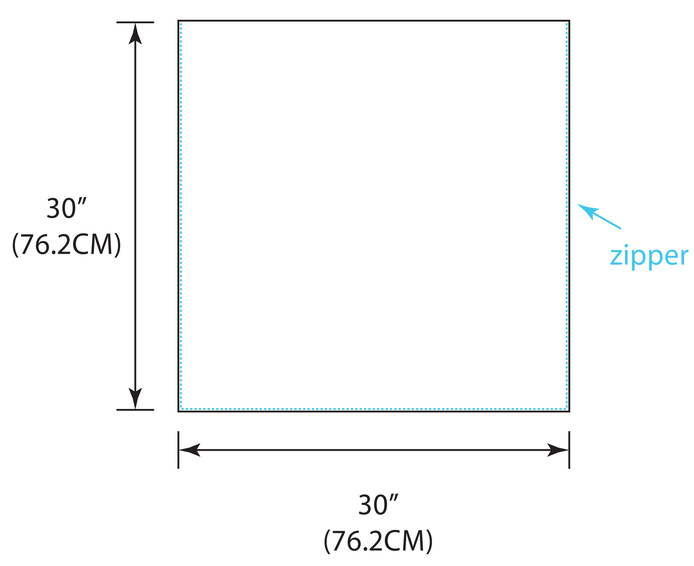

FOR BEST RESULTS, design your artwork using this template in Illustrator. Save file as AI or PDF with layers.

If using Photoshop, make sure that all sizes are correct as Photoshop may distort and resize template. Save at a minimum 100 DPI.